ARES

DESCRIPTION

The ARES series of luminaires is the ideal solution for lighting road traffic routes, pedestrian paths, squares and parking areas.
It offers a modern and elegant design based on smoothly curved surfaces without external fins, guaranteeing excellent integration into the urban environment at mounting heights from 4m to 12m.
It is available in 3 sizes, for which there are numerous photometric distributions, all of them equipped with high-efficiency LEDs.
Constructed of high-pressure die-cast aluminium, with a surface coating based on electrostatically deposited and oven-cured epoxy paint, which gives a durable and corrosion-resistant finish.
The optical closure is made of flat tempered glass, guaranteeing a level of luminous flux emitted towards the upper hemisphere of 0% (FHS=0%)

Parameter	ARES S 15	ARES S 20	ARES S 30	ARES M 40	ARES M 50	ARES M 70	ARES M 90	ARES L 120	ARES L 150
Power	15 W	20 W	30 W	40 W	50 W	70 W	90 W	120 W	150 W
Color temp.	3000K, 4000K (optional 5000K)								
Luminous flux	1.950 lm	2.700 lm	4.100 lm	4.600 lm	6.700 lm	9.350 lm	11.550 lm	15.400 lm	20.000 lm
Power factor	> 0,95								
CRI	Ra 70 (optional Ra 80)								
IP	IP66								

** Nominal powers. They can be adjusted to values by regulating the lout of the driver*

TECHNICAL CHARACTERISTICS

- Luminous efficiency up to 135 lm/W
- Input voltage: AC 100-240Vac; 50/60Hz
- Life span> L80B10 100,000h (Ta= 25°C)
- IP66 / IK08
- Surge protection: 10kV/20kV
- Operating temperature:-30°C +50°C.
- Mounting diameters 34/42/60/76mm
- Net weight: 4.1Kg(S), 6.8Kg(M), i 9.2Kg(L)
- Electrical class I or II
- DRIVER. Available options: DALI, 1-10V, PWM, CLO, NTC, head flow regulator, time zone regulation up to 5 steps
- Possibility of photocell
- Optional: 5 to 7 pin NEMA connector

STANDARDS / CERTIFICATES

- UNE-EN 60598-1
- UNE-EN 60598-2.3
- UNE-EN 62031
- UNE-EN 62471
- UNE-EN 62493
- UNE-EN 61347-2-13
- UNE-EN 62384
- UNE-EN-55015
- UNE-EN-61547
- UNE-EN-61000-3-2
- UNE-EN-61000-3-3
- RoHS
- CE
- ENEC

ARES

DIMENSIONS

* Units in mm

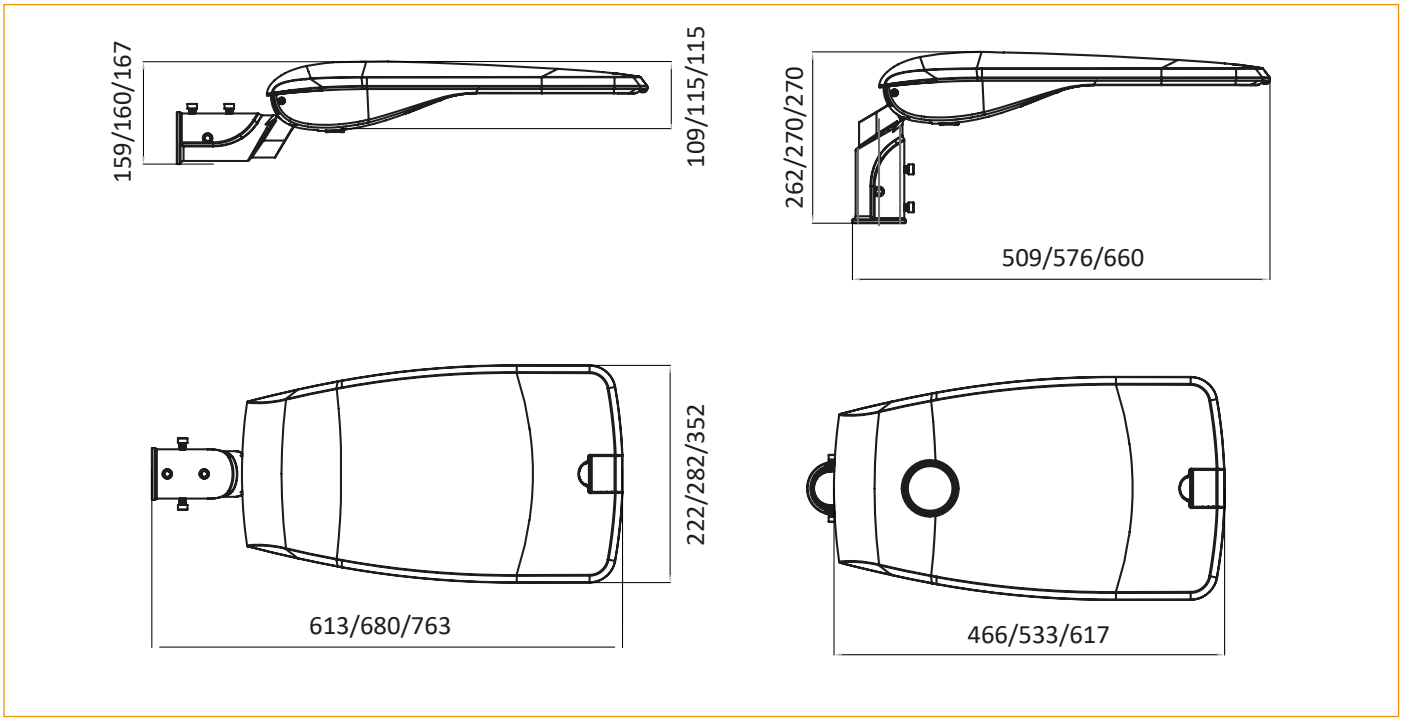

SIZES

MOUNTING

PHOTOMETRIES

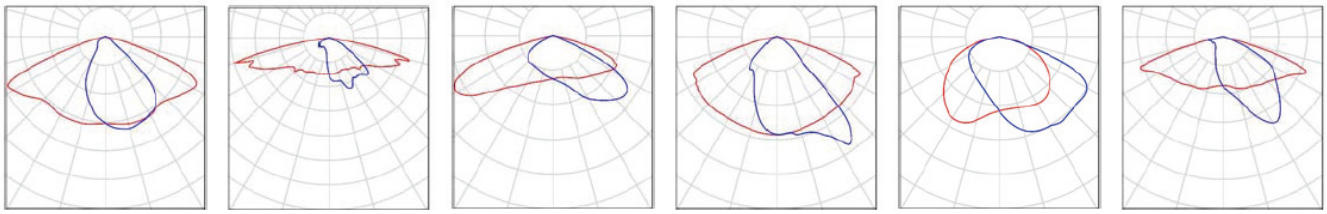

* More photometries available depending on application